Cambridge International AS & A Level

Cambridge International Examinations
Cambridge International Advanced Subsidiary and Advanced Level

CANDIDATE NAME

CENTRE NUMBER

CANDIDATE NUMBER

5179321978

PHYSICS **9702/31**

Paper 3 Advanced Practical Skills 1 **October/November 2016**

2 hours

Candidates answer on the Question Paper.

Additional Materials: As listed in the Confidential Instructions.

READ THESE INSTRUCTIONS FIRST

Write your Centre number, candidate number and name on all the work you hand in.
Write in dark blue or black pen.
You may use an HB pencil for any diagrams or graphs.
Do not use staples, paper clips, glue or correction fluid.
DO **NOT** WRITE IN ANY BARCODES.

Answer **both** questions.
You will be allowed to work with the apparatus for a maximum of one hour for each question.
You are expected to record all your observations as soon as these observations are made, and to plan the presentation of the records so that it is not necessary to make a fair copy of them.
You are reminded of the need for good English and clear presentation in your answers.

Electronic calculators may be used.
You may lose marks if you do not show your working or if you do not use appropriate units.

Additional answer paper and graph paper should be used only if it becomes necessary to do so.

At the end of the examination, fasten all your work securely together.
The number of marks is given in brackets [ ] at the end of each question or part question.

For Examiner's Use	
1	
2	
Total	

This document consists of **13** printed pages and **3** blank pages.

© UCLES 2016

CAMBRIDGE International Examinations

BLANK PAGE

You may not need to use all of the materials provided.

1 In this experiment, you will investigate the motion of a mass attached to a system of springs.

(a) (i) Set up the apparatus as shown in Fig. 1.1.

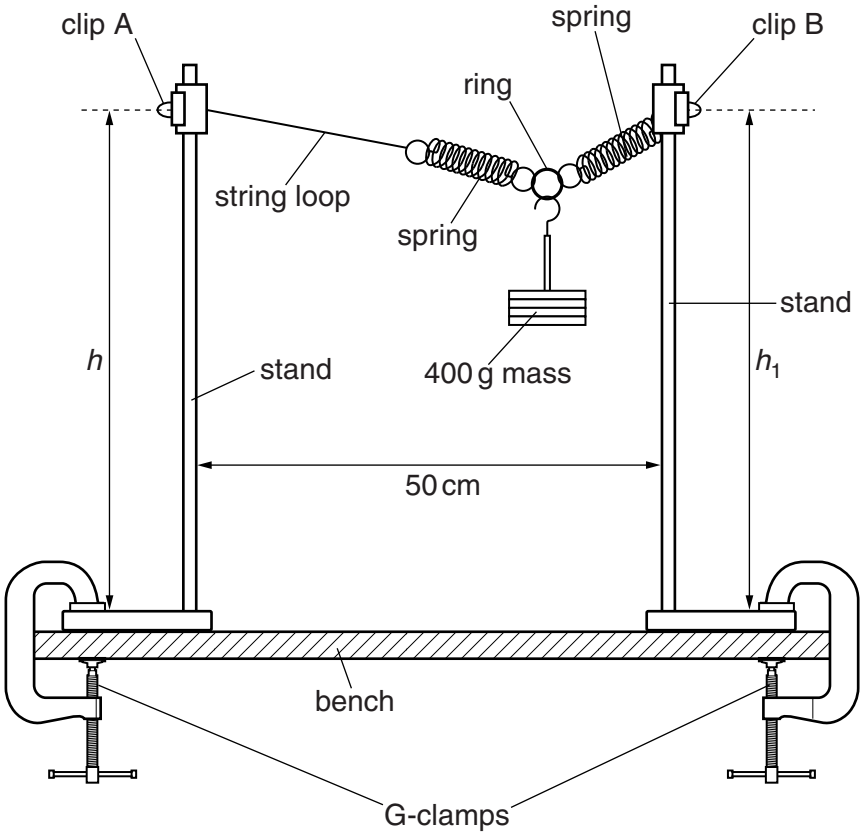

Fig. 1.1

Slide the string loop over the rod of a stand and fix it in place near the top of the rod with one of the clips.

Slide the free loop of the spring over the other rod and fix it in place with the other clip.

The string loop in clip A is a height h above the base of the stand and the spring loop in clip B is a height h_1 above the base of the stand. Adjust the apparatus until h and h_1 are equal.

(ii) Measure and record h.

h = ...

(b) Pull the 400 g mass down through a short distance.
Release the mass.

The mass will oscillate.

Determine the period T of these oscillations.

$T =$ ..... [2]

(c) The period T of the oscillation of a mass m attached to a system of springs is given by

$$T = 2\pi\sqrt{\frac{m}{k}}$$

where k is the spring constant of the system.

The mass m is 0.400 kg.

Using your answer in **(b)**, calculate the corresponding value of k.
Give your answer to an appropriate number of significant figures.

$k =$ ..... N m^{-1} [2]

© UCLES 2016

(d) (i) Slide the spring loop in clip B down by approximately 5 cm as shown in Fig. 1.2. Do **not** move clip A.

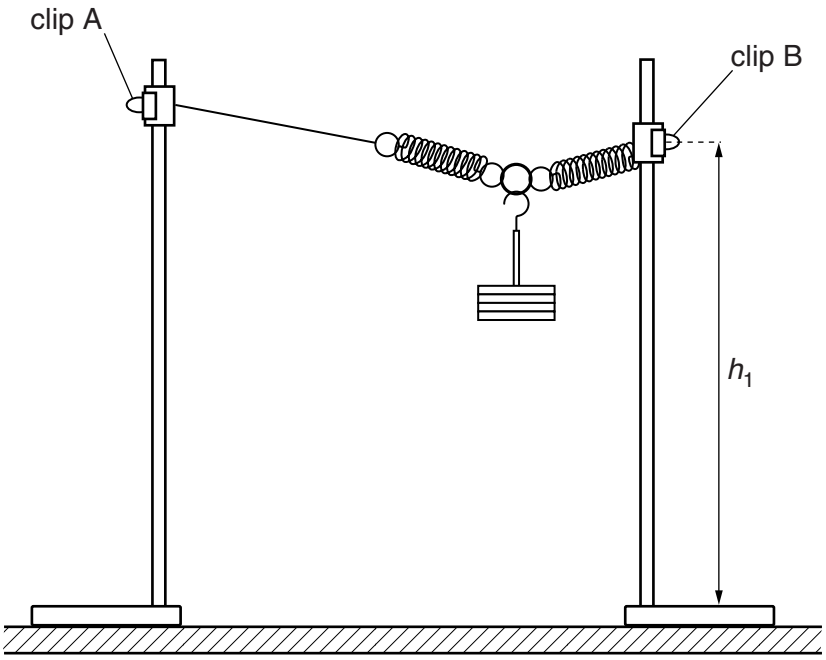

Fig. 1.2

The spring loop in clip B is a height h_1 above the base of the stand.

(ii) Measure and record h_1.

h_1 = ...

(iii) Calculate $(h - h_1)$.

$(h - h_1)$ = ...

(iv) Repeat **(b)**.

T = ...

(e) Vary h_1 and repeat **(d)(ii)**, **(d)(iii)** and **(b)** until you have six sets of values of $(h - h_1)$ and T. Do **not** move clip A.

Include in your table the two sets of values already taken.

[8]

(f) **(i)** Plot a graph of T on the y-axis against $(h - h_1)$ on the x-axis. [3]

(ii) Draw the straight line of best fit. [1]

(iii) Determine the gradient and y-intercept of this line.

gradient = ...

y-intercept = ...

[2]

© UCLES 2016

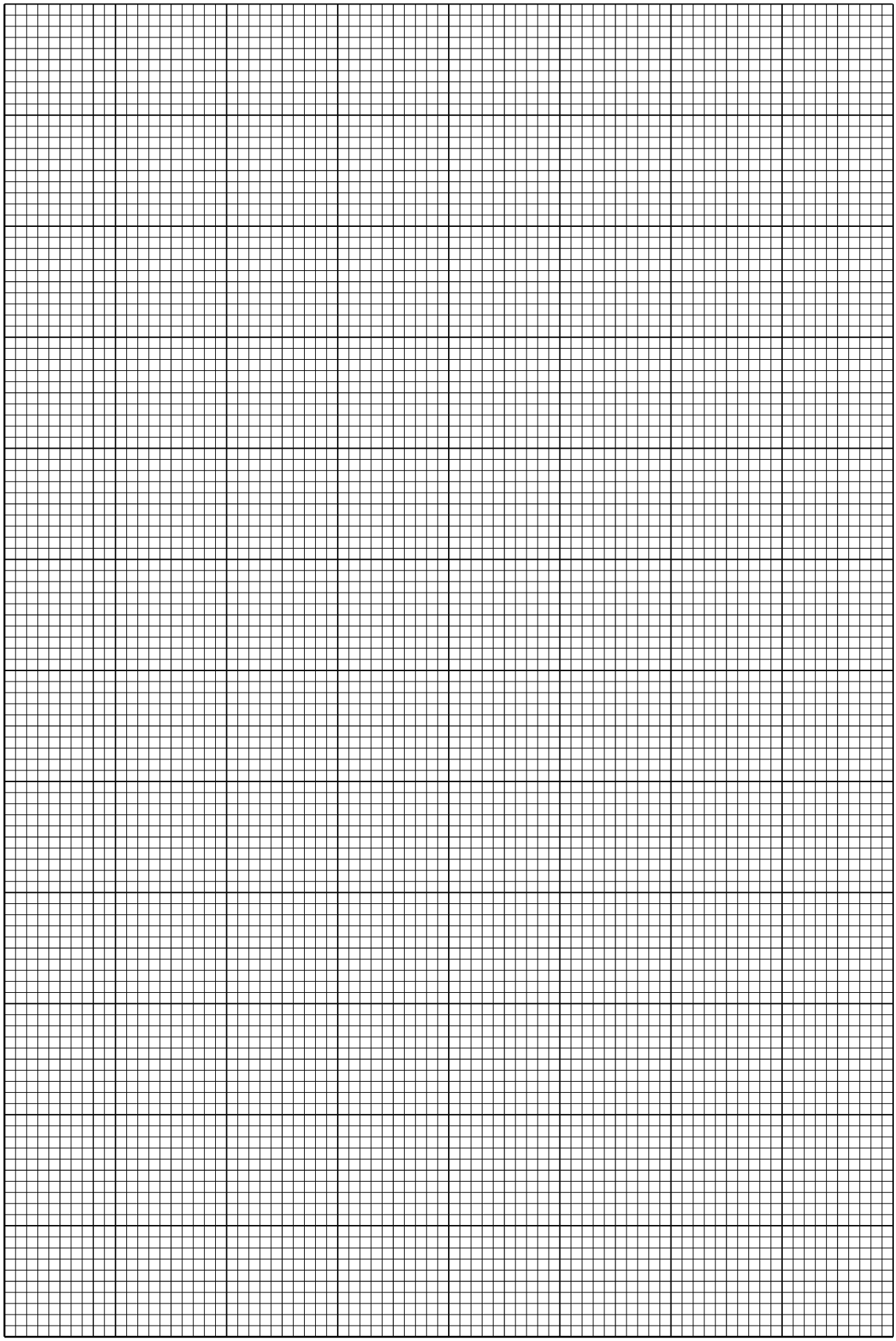

(g) It is suggested that the quantities T and h_1 are related by the equation

$$T = P(h - h_1) + Q$$

where P and Q are constants.

Using your answers in **(f)(iii)**, determine the values of P and Q.
Give appropriate units.

P = ...

Q = ...

[2]

[Total: 20]

You may not need to use all of the materials provided.

2 In this experiment, you will investigate the potential difference across a current-carrying wire.

(a) You have been provided with a wooden strip with wires attached.
The wire attached between A and B has a diameter *D*.

(i) Without detaching the wire from the board, measure and record *D*.

D = ...[1]

(ii) Estimate the percentage uncertainty in your value of *D*.

percentage uncertainty = ...[1]

© UCLES 2016

[Turn over

(b) Set up the circuit shown in Fig. 2.1.

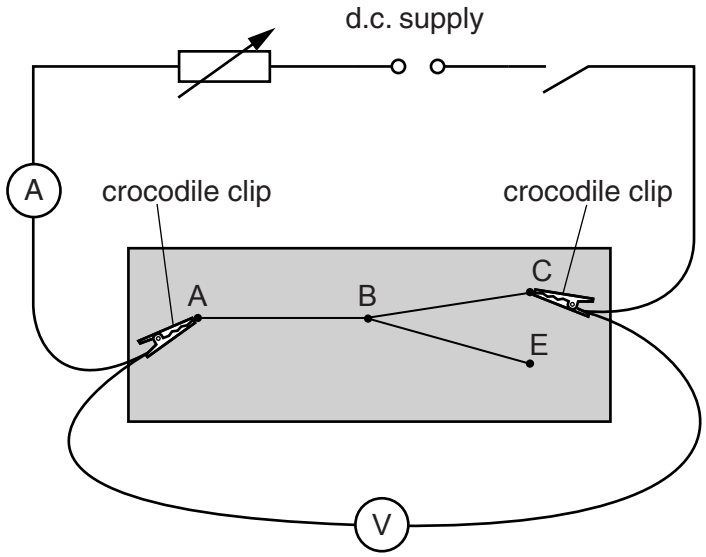

Fig. 2.1

The crocodile clips should be connected to A and C.

(c) **(i)** Adjust the rheostat to approximately the middle of its range.

(ii) Close the switch.

(iii) Record the ammeter reading.

ammeter reading = ...[1]

(iv) Record the voltmeter reading *V*.

V = ...[1]

(v) Open the switch.

© UCLES 2016

(d) (i) The wire attached between B and C has a diameter d.

Measure and record d.

$d =$ .....[1]

(ii) Calculate G where

$$G = \frac{D^2 + d^2}{D^2 d^2}.$$

$G =$ .....[1]

(iii) Justify the number of significant figures that you have given for your value of G.

.....

.....

.....[1]

(e) (i) Disconnect the crocodile clip from C and connect it to E.

(ii) Close the switch.

(iii) Adjust the rheostat so that the ammeter reading is the same as in **(c)(iii)**.

(f) (i) Repeat **(c)(iv)** and **(c)(v)**.

V = ...[2]

(ii) The wire attached between B and E has diameter d.

Measure and record d and calculate G.

d = ...

G = ...
[1]

(g) It is suggested that the relationship between V and G is

$$V = kG$$

where k is a constant.

(i) Using your data, calculate two values of k.

first value of k = ...

second value of k = ...

[1]

(ii) Explain whether your results support the suggested relationship.

.....

.....

.....

.....[1]

(h) (i) Describe four sources of uncertainty or limitations of the procedure for this experiment.

1. .....

.....

2. .....

.....

3. .....

.....

4. .....

..... [4]

(ii) Describe four improvements that could be made to this experiment. You may suggest the use of other apparatus or different procedures.

1. .....

.....

2. .....

.....

3. .....

.....

4. .....

..... [4]

[Total: 20]

BLANK PAGE

BLANK PAGE

Permission to reproduce items where third-party owned material protected by copyright is included has been sought and cleared where possible. Every reasonable effort has been made by the publisher (UCLES) to trace copyright holders, but if any items requiring clearance have unwittingly been included, the publisher will be pleased to make amends at the earliest possible opportunity.

To avoid the issue of disclosure of answer-related information to candidates, all copyright acknowledgements are reproduced online in the Cambridge International Examinations Copyright Acknowledgements Booklet. This is produced for each series of examinations and is freely available to download at www.cie.org.uk after the live examination series.

Cambridge International Examinations is part of the Cambridge Assessment Group. Cambridge Assessment is the brand name of University of Cambridge Local Examinations Syndicate (UCLES), which is itself a department of the University of Cambridge.